4200 series

STÖHR ARMATUREN

Cryogenic On-Off Valve PN250 Pneumatic Operation

bellow in top of housing

General characteristics (identical for all valves of the 4200 series)

Media	N_2, O_2, H_2, Ar, N_2O, CO_2, other media possible; please **always** specify media when placing an order	
Specifications:	**Standard design**	**Accessories and modifications**
Housing material:	stainless steel 1.4404 or 1.4541	other materials possible, please specify
Seal in seat*:	metal/soft packing (PCTFE) leakage $<10^{-6}$ mbar x l/sec.	other plastics, metal to metal, special alloys
Spindle seal**:	with bellows and safety gland (lip seal Viton)	other materials for lip seal possible, please specify
Sealing to the atmosphere:	with metal seal, leakage: $<10^{-8}$ mbar x l/sec. helium sealing test (vacuum method)	
Connection:	welded on	other connections possible, please specify
Purity:	free of oil and grease	fitting in clean room; electropolished Ra < 0,4/0,25µm
Pressure test:	according to TRB 801 No. 45	
Ceritfication:	according to DIN 55350 T.18-4.2.2 (M) or -4.2.1.(O)	according to EN 10204-3.1 pressure-bearing parts with media contact

*not with filter **not with non-return valve and filter

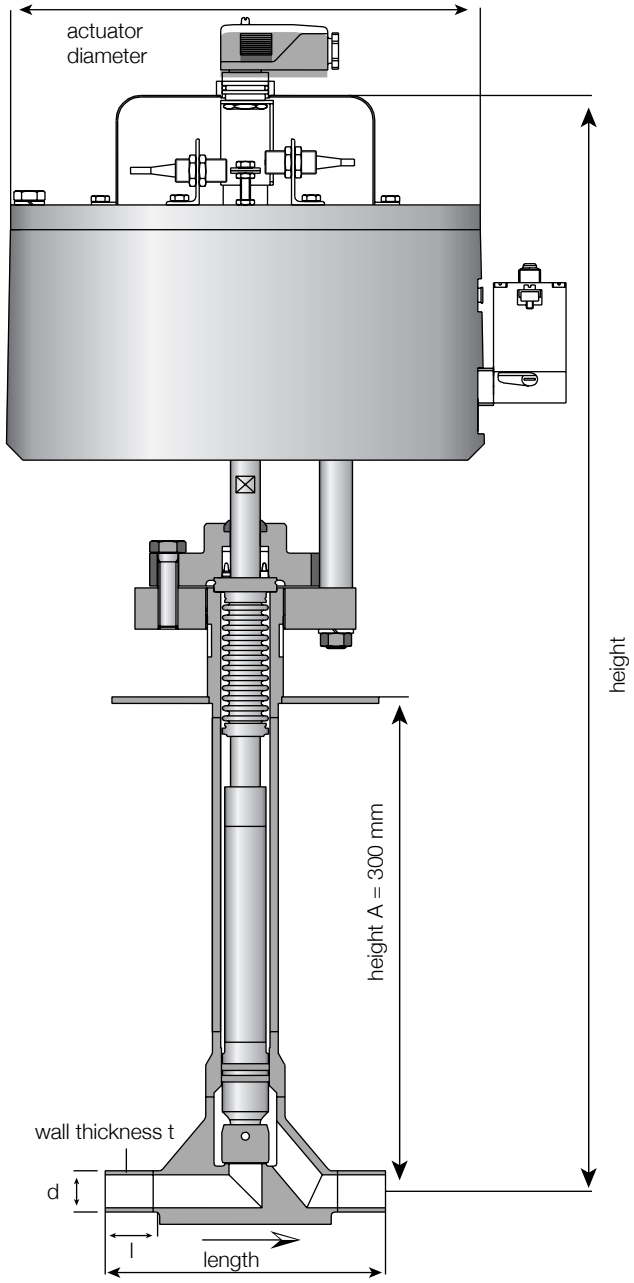

Specifications	
Operating temperature:	-196°C to +50°C (with material 1.4404) -253°C to +50°C (with material 1.4571)
Drive:	with piston actuator actuating pressure: 6 bar max. (standard version)
Standard:	leak detecting port
Optional extras:	weld-on flange (please specify diameter) vacuum insulation
Accessories:	3/2 way solenoid valve 230V/50Hz or 24 V= (also explosion proof) limit switches (also explosion proof) with wiring, socket and plug
Installation position:	actuator upward or max. 30° away from the vertical

Important! When ordering, please specify:
- media and operating temperature
- "normally open", "normally closed"

DN	Seat ø	Standard connection (d,t,l)	Length	Height	Drive ø	Order No.
4	10	6,0 x 1,0 x 25	130	650	220	18-4200.13.1
6	10	8,0 x 1,0 x 25	130	650	220	18-4201.13.1
8	10	12,0 x 1,5 x 25	130	650	220	18-4202.13.1
10	10	14,0 x 2,0 x 25	130	650	220	18-4203.13.1
15	20	20,0 x 2,5 x 25	170	680	285	18-4204.13.1
20	20	25,0 x 2,5 x 25	170	680	285	18-4205.13.1
25	25	30,0 x 3,0 x 25	200	710	400	18-4206.13.1

all length dimensions in mm

02/2006 • Subject to change • No reliability accepted for printing and other errors • Please observe our safety instructions

GLC Certified ISO 9001

STÖHR ARMATUREN GmbH&Co KG • Dornierstrasse 4 • D-86343 Königsbrunn bei Augsburg • Germany
telephone: +49/8231/3490-0 • fax: +49/8231/3490-40 • email: info@stoehr-armaturen.de